ISSN 2395-1621

Noise Reduction of Centrifugal blower with Rectangular Splitter type of Silencer

#1Anupriya Ashok Kankal, #2Prof. S. R. Patil

1anupriyakankal@gmail.com

2srpatil@aissmscoe.com

#1PG Student - Mechanical Design Engineering, Savitribai Phule Pune University, Pune.

#2Assistant Professor - Mechanical Engineering Department, Savitribai Phule Pune University, Pune.

AISSMS College of Engineering, Pune-01, Maharashtra, India.

ABSTRACT

Centrifugal blower which is rotary, bladed device maintaining continuous flow of air are being widely used in many industrial applications. Due to constant running it generates noise, and this noise should be controlled. Noise can be reduced by both active and passive methods while this work includes passive method for noise reduction of backward curved centrifugal blower with implementation of rectangular splitter type of silencer at the exhaust duct. Splitter silencer is a dissipative silencer which uses sound absorbing materials to absorb the noise. Design of this silencer is based on certain parameters like silencer inlet open area ratio, type of absorbing material and total length of silencer. In this work, silencers are designed and fabricated for 40% and 80% silencer inlet open area having total lengths 900mm and 500mm and absorbing materials used are Puff sheet, Rock wool and Glass wool. Noise absorbed by these materials are generally depends upon coefficient of absorption of the respective materials. Modelling of silencers are done with help of Pro-E software. Noise reduced by silencer can be determined experimentally with 1/3 rd octave band of FFT analyzer.

Keywords— **Centrifugal blowers, Splitter silencer, sound absorbing materials, FFT analyzer.**

ARTICLE INFO

Article History

Received :18th November 2015

Received in revised form :

19th November 2015

Accepted : 21st November , 2015

Published online :

22nd November 2015

I. INTRODUCTION

A centrifugal blower is a most important mechanical device for moving air or other gases. Centrifugal turbo machines are common devices used in many flow control applications due to their ability to achieve relatively high pressure ratios in a short axial distance as compared to axial fans. They use the kinetic energy from the impellers or the rotating blade to increase the pressure of the air stream which then moves against the resistance caused by ducts and other components of blower. The Centrifugal blower is the most prevalent type of blower used in the HVAC industry today. These blowers are usually cheaper than axial fans and simpler in construction. As the required power and the rotating speed of impeller increase the noise generated from centrifugal blower becomes more serious problem. The blower and fan noise mainly consists of vibration induced noise and flow induced noise. The noise generated by a blower depends on its type, airflow rate, and pressure. Inefficient blower operation is often indicated by a comparatively high noise level. If high blower noise levels are unavoidable, then ways to attenuate the acoustic energy should be considered. Noise generated by the blower is very much dependent on the diameter and the rotational speed of the blower, typically proportional to the fifth or sixth power of the linear velocity of the type of the blades [2]. The other parameters influencing the noise are construction characteristics, friction between parts, and its flow paths. This noise generated by the source can be minimized or controlled by introducing the dissipative rectangular splitter

type of silencer at the outlet or exhaust duct. These give high frequency attenuation at vey minimum

aerodynamic pressure losses. The dissipative silencers are the most widely used devices to attenuate the noise in ducts through which fluid flows and in which the broadband sound attenuation must be achieved. They are used in the intake and exhaust ducts of industrial equipments such as fans, blowers, ventilation and access openings of acoustical enclosures, etc. These devices contain fibrous or porous materials and depend on absorptive dissipation of the acoustical energy.

The most common configurations of dissipative silencers include parallel baffle type or splitter silencers, round silencers, and lined ducts. Each splitter normally consists of a bulk-reacting fibrous type material separated from the airway by a thin perforated metal sheet. This helps to maintain the dimensional stability of splitters and airflow between each splitter which helps to lower the pressure drop across the silencer. This paper consists of design and modeling of rectangular splitter silencer for backward curved centrifugal blower. The performance of splitter silencer depends upon several constraints like length of the silencer, percentage of its open area and sound absorbing materials. The silencers designed in this paper are based on the above basis.

II. THEORETICAL MODEL

Dissipative silencers or mufflers differ from reactive mufflers such that in dissipative muffler noise reduction is achieved primarily by attenuation of acoustic energy within the lining of sound absorbing material. For the dissipative muffler shown in Fig.1 the instantaneous acoustic pressure and instantaneous volume flow, including the effect of acoustic energy attenuation, can be written as follows:

$$P(x, t) = Ae^{-\sigma x} e^{j(wt-kx)} + Be^{\sigma x} e^{j(wt+kx)} \text{..... 1)}$$

$$U(x, t) = (SA / \rho_0 c) e^{-\sigma x} e^{j(wt-kx)} - (SB/\rho_0 c) e^{\sigma x} e^{j(wt+kx)} \text{ ..... 2)}$$

Where,

σ = attenuation coefficient for the muffler lining,

A and B = constants to be determined from the boundary conditions.

The first term on the right side of Equations 1) and 2) represents the sound wave travelling in the + x direction, and the second term represents the sound wave travelling in the - x direction. At origin i.e. at x = 0 at the interface of the inlet tube and the muffler. At this point, the acoustic pressure on the silencer inlet side P_1 (0, t) and on the silencer side P_2 (0, t) must be equal. Also, the volumetric flow quantities U_1 (0, t) and U_2 (0, t) must be the same at the interface. These two conditions yield the

$$A_1 + B_1 = A_2 + B_2$$
$$A_1 - B_1 = m (A_2 + B_2)$$

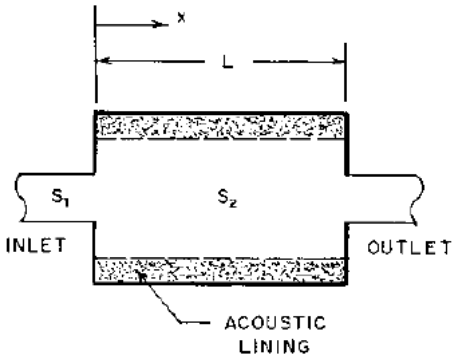

Fig.1 Model of Silencer

Where, m = S_2/S_1. It is assumed that the inlet and outlet tubes have the same dimensions then, $S_1 = S_3$. At (x = L), we may equate the instantaneous acoustic pressures P_2 (L, t) & P_3 (L, t). The volume flow quantities U_2 (L, t) & U_3 (L, t) In calculating the transmission loss for the muffler, it is assumed that there are no reflected sound waves in the exit tube, $B_3 = 0$. The application of these conditions yields two additional relationships between the constants which are given as follows,

$$A_2 e^{-\sigma L} e^{-jkL} + B_2 e^{\sigma L} e^{jkL} = A_3 \text{ ..... 3)}$$
$$m (A_2 e^{-\sigma L} e^{-jkL} - B_2 e^{\sigma L} e^{jkL}) = A_3 \text{ ..... 4)}$$

The sound power transmission coefficient is the ratio of the power transmitted to the power incident on the muffler:

$$a_t = \frac{W_{tr}}{W_{in}} = \frac{S_3}{S_1}\frac{I_{tr}}{I_{in}} = \frac{P_{tr}^2}{P_{in}^2} = \frac{A_3^2}{A_1^2} \text{ ..... 5)}$$

If we solve Equations 4) through 5) simultaneously, we obtain the following expression for the reciprocal of the sound power transmission coefficient for the dissipative muffler,

$$1 / a_t = C_1^2 \cos^2 (k L) + C_2^2 \sin^2 (k L) \text{ ..... 6)}$$

The constants can be given by,

$$C_1 = \cosh (\sigma L) + 0.5(m+1/m) \sinh (\sigma L)$$
$$C_2 = \sinh (\sigma L) + 0.5(m+1/m) \cosh (\sigma L)$$
$$K = \frac{2\pi f C}{c} = \text{wave number}$$

The effect of the absorptive lining may be investigated by considering. First, for small attenuation (i.e. σ L << 1), or For σ L < = 0.20 for practical purposes, the hyperbolic functions approach the following limiting values within 2%.

$$\cosh (\sigma L) \rightarrow 1 \;\&\; \sinh (\sigma L) \rightarrow \sigma L \quad (\text{for } \sigma L < 0.2) \text{ .....7)}$$

If we make the substitutions from equations 7) into 6), we obtain the following expression for the small-attenuation limit:

$$1/a_t = (1 + 0.5(m + 1/m) \sigma L)^2 + \frac{1}{4}(m - 1/m)^2 \sin^2(k L) \text{ ..... 8)}$$

At the other limit of very large attenuation (σ L>>1), or for σ L >= 5 for practical purposes, the hyperbolic functions takes the following limiting values within 1%.

$$\sinh(\sigma L) \sim \cosh(\sigma L) \rightarrow \frac{1}{2} e^{\sigma L} \quad (\text{for } \sigma L >= 5) \text{ ..... } 9)$$

When we make the substitution from equations 9) into 6) obtain the following expression for the large attenuation limit:

$$1/a_t = \frac{1}{4} e^{2\sigma L} (1 + 0.5(m + 1/m))^2 \text{ ..... } 10)$$

Taking $\log_{10}$ of both sides of Eq. 10) and multiplying by 10, we obtain the transmission loss expression for the large-attenuation limit:

$$T L = 8.6859\, \sigma L + 20\log_{10}(0.5 + \frac{1}{4}(m + 1/m)) \text{ ..... } 11)$$

The first term in Eq. 11) represents the attenuation provided by the lining of absorbing material, and the second term represents the effect of reflection of acoustic energy back to the source as a result of the change in cross-sectional area of the flow passage. The attenuation coefficient may be estimated from the following expression (Beranek, 1960):

$$\sigma = \frac{\pi f P_w}{2S_2} \left(\frac{\rho_e Y}{2k}\right)^{0.5} [(1 + \psi^2)^{0.5} - 1]^{0.5} \text{.....} 12)$$

Where,
P_w = perimeter of the flow passage in the silencer
S_2 = open cross sectional area of the silencer
ρ_e = effective density for the air or gas within the lining material
Y = porosity of the lining
K = effective elasticity coefficient for the gas within the lining Material
Ψ = Dimension less parameter = $\frac{R_e}{2\pi f \rho_e}$

The quantity R_e is the effective flow resistance per unit thickness for the lining material. Two general classes of acoustic lining materials are considered: a semi rigid material and a soft blanket material.

A semi rigid material is one in which the solid portion of the material is relatively rigid, e.g., an acoustic ceiling tile. A soft blanket material is one in which the solid portion of the material is relatively flexible, e.g., a panel of glass fibro-acoustic material. Here we use Puff sheet, Rock wool and Glass wool as a lining of sound absorbing material.

III. Design of Silencer

Silencer designed in this paper is based on silencer inlet open area percentage and selection of length of silencer. The previous study shows, generally for dissipative splitter type of silencer 40% and 80% open inlet gives appropriate results thus, this paper gives design of splitter silencer for the exhaust duct with 120 × 200 mm^2 area with above percentages of silencer open areas

.

A. *40 % Silencer inlet open area*

The parameters needed to obtain the attenuation per duct width are the width of the baffles and the spacing between each baffle. These are used to calculate the percentage open area.

$$\% \text{ OAR} = 100 \times \frac{a}{(a + t)} \text{ ..... } 13)$$

$$40 = 100 \times \frac{a}{(a + t)}$$

$$0.4\, a + 0.4\, t = a$$

$$\text{Therefore, } \frac{t}{a} = \frac{0.6}{0.4} = 1.5$$

$$\text{Thus, } t = 1.5\, a$$

By assuming thickness t = 20 mm we get distance between splitter a = 15 mm.

B. *80 % Silencer inlet open area*

The procedure is same as previously done for 40 % Silencer inlet open area. Therefore for splitter thickness of 20 mm we get distance between splitter as 80 mm.

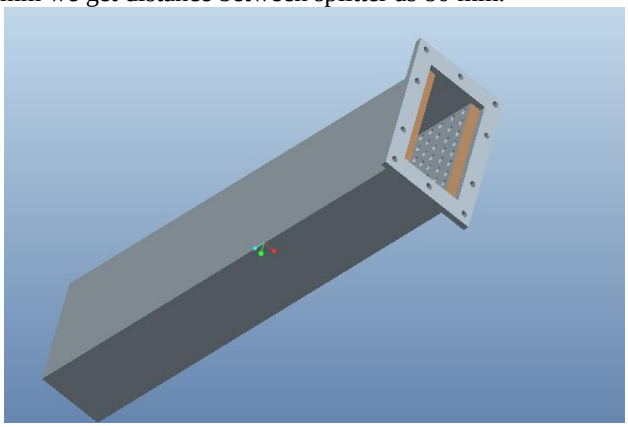

Fig.2 80 % Silencer inlet open area with Length 900 mm and Rockwool as sound absorbing material.

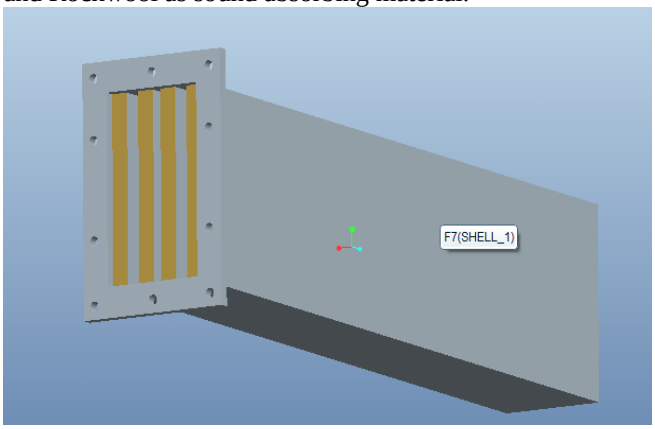

Fig.3 40 % Silencer inlet open area with Length 900 mm and Rockwool as sound absorbing material

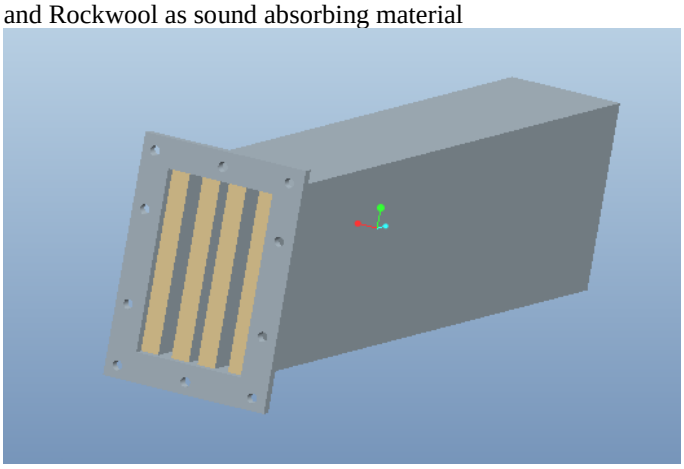

Fig.4 40 % Silencer inlet open area with Length 500 mm and Rockwool as sound absorbing material.

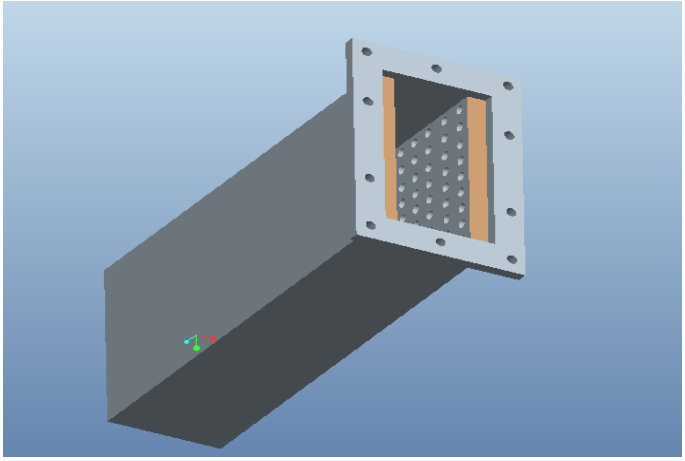

Fig. 5 80 % Silencer inlet open area with Length 500 mm and Rockwool as sound absorbing material.

IV. EXPERIMENTATION METHODOLOGY

Experimentation design is done with help of Taguchi Method of Design of Experiments. In the experiment there are three variables are included which are percentage of silencer open area, type of sound absorbing material and length of silencer. The design and fabrication of silencers are done by considering the above parameters.

A. Structure of the testing system:

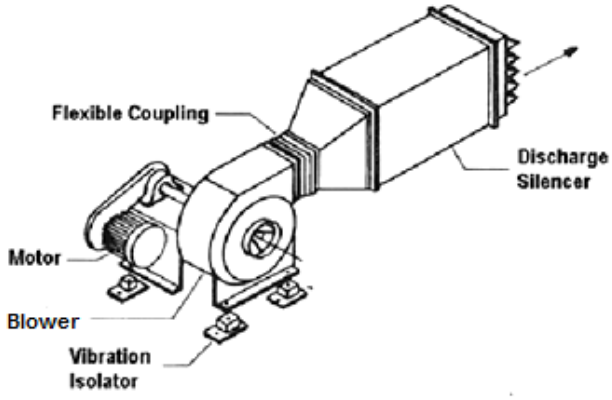

Fig. 6 Generalized arrangement for testing of silencer with blower

B. Selection of FFT analyzer:

When the blower is in operating condition the noise generated is continuous so it is not feasible to check it with the help of normal sound level meter. A high precision is required to control the noise as well as a high precision testing is required to analyze the frequency spectrum. So, FFT analyzer with 1/3rd octave band frequency will be used for the experimentation.

C. Arrangement of Testing Points:

Experimental testing for noise reduction is to be done in parallelepiped arrangement of microphone. So there will be testing of noise for different sound absorbing materials like Puff sheet, Rock wool and Glass wool with silencer having percentage of open area 40 and 80 with lengths 900 mm and 500 mm. So the purpose of the experimentation is to analyze the configuration of silencer with maximum noise reduction.

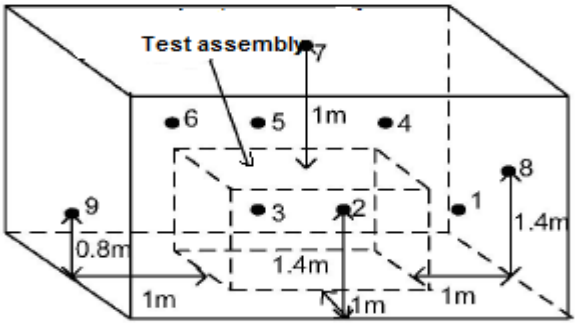

Fig.7 Arrangement for testing of noise

V. DISCUSSION

The objective of the paper is the reduction of the noise by using a dissipative silencer at the exhaust duct. Silencers has been designed and fabricated for the 40% and 80% silencer inlet open area.

VI. CONCLUSION

- For the noise reduction of centrifugal blower a splitter type of silencer containing sound absorbing material can be used.
- In dissipative type of silencer the noise reduction is given by the term attenuation so the theoretical model with acoustical material lining is derived to get the transmission losses as well as attenuation.
- The design and fabrication has been done and the models are generated with help of Pro-E software.
- Experimentation methodology describes the generalized arrangement of assembly as well as the arrangement for the testing of noise for different microphone positions.

REFERENCES

[1] Randall F. Barron, Industrial Noise Control and Acoustics, 2nd ed., Louisiana Tech University Ruston, Louisiana, U.S.A. pg no.335-400.

[2] T.F.W Embelton, "Experimental study of noise reduction of centrifugal blower", journal of acoustic society of America, Vol.35 no.5, pp.700-705, 18 feb1963.

[3] E.A.Leskov, G. L. Osipov and E.J.Yudin, "Experimental Investigation of Splitter Duct Silencer", Applied Acoustics,Vol.3, pp.47-55,1969.

[4] A. Cummins, "Sound Attenuation in Ducts lined on two Opposite walls with Porous Material, with some applications to Splitters", Journal of Sound and Vibration, Vol.49, no.1,pp.9-35, 1976.

[5] Ramani Ramkrishnan and Willie Watson, "Design curves for Rectangular Splitter Silencer", Applied Acoustics, Vol.35,pp.1-24,1992.

[6] Alexandre Luiz Amarante Mesquita, Ernesto Arthur Monteiro Filho, "Use of Dissipative Silencers for Fan Noise Control", The 2005 Congress and Exposition on Noise Control Engineering, 7-10 August2005 Brazil.,2005.

[7] Ira Dyer, "Noise Attenuation of Dissipative Mufflers",1956, Available: http://www.acousticalsociety.org/contents/terms.

[8] Dario Bogdanovic, "Calculation methods for predicting attenuation of parallel baffle type silencers", Master's Thesis in the Master's programme in Sound and Vibration, Chalmers University of technology, 2014.

